Engg. Services Exam, 2011

Sl. No. 7801 D–RSR–L–RGB

ELECTRONICS AND TELECOMMUNICATION ENGINEERING

Paper—II

(Conventional)

Time Allowed : Three Hours	Maximum Marks : 200

INSTRUCTIONS

Candidates should attempt Question No. 1 which is compulsory, and FOUR more questions taking TWO each from Section—A and Section—B.

The number of marks carried by each question is indicated at the end of the question.

Answers must be written only in ENGLISH.

Assume any data, if required, and indicate the same clearly.

Unless otherwise indicated, symbols and notations have their usual meanings.

Some useful constants are given below :

Electron charge	:	$e = 1 \cdot 6 \times 10^{-19}$ coulomb
Electron mass	:	$m = 9 \cdot 1 \times 10^{-31}$ kg
Planck's constant	:	$h = 6 \cdot 625 \times 10^{-34}$ J-s
Velocity of light	:	$c = 3 \times 10^{8}$ m/s
Universal constant of gravitation	:	$G = 6 \cdot 668 \times 10^{-11}$ $m^3/kg\text{-}s^2$

Mass of the earth	:	$M = 5 \cdot 997 \times 10^{24}$ kg
Radius of the earth	:	$R = 6378$ km
Permeability of vacuum	:	$\mu_0 = 4\pi \times 10^{-7}$ H/m
Permittivity of vacuum	:	$\varepsilon_0 = \frac{10^{-9}}{36\pi}$ F/m

1. *(a)* The ideal transfer characteristic of a particular circuit is given in Fig. 1. Design the circuit. Draw the output waveform with proper explanation, if $V_i = 10 \sin \omega t$. 8

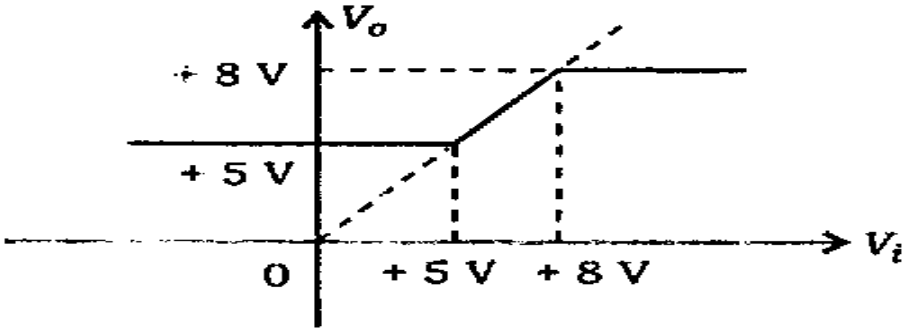

Fig. 1

(b) Implement the function

$$f(A, B, C, D) = \Sigma(0, 1, 5, 7, 10, 14, 15)$$

using an appropriate multiplexer. 8

(c) Without drawing the Nyquist plot, find the number of encirclements, N of the $-1 + j0$ point, in the $G(s)H(s)$-plane, for the system having its open-loop transfer function

$$G(s)H(s) = \frac{10}{s(s+3)(s^2+s+1)}$$

Comment on the stability of the closed-loop system. 8

(d) A system employing a proportional and an error-rate control is shown in Fig. 2. Determine *(i)* the error-rate factor K_e, so that the damping ratio is 0·5 and *(ii)* the steady-state error for unit ramp input. 8

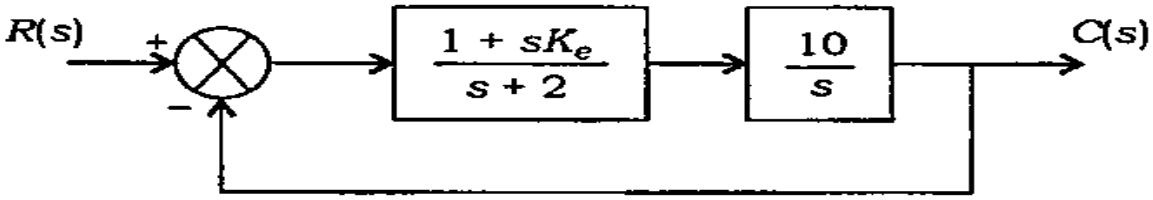

Fig. 2

(e) Four source messages are probable to appear as

$$m_1 = \frac{1}{2},\ m_2 = \frac{1}{4},\ m_3 = \frac{1}{8},\ m_4 = \frac{1}{8}$$

Obtain its Huffman coding and determine the coding efficiency. 8

(f) Explain what is meant by geostationary orbit of satellite. How do the geostationary and geosynchronous orbit differ? 8

(g) In order to sample incident and reflected power in a waveguide, two identical 30-dB directional couplers are used. If VSWR = 2 and output of the directional coupler sampling incident power = 4·5 mW, determine the value of the reflected power. 8

(h) An earth station uses a 30 metre dish with circular aperture for receiving satellite signals at 4 GHz downlink frequency. If $\frac{G}{T}$ ratio of the earth station is 20 dB, compute the system noise temperature. 8

(i) Explain the sequence of operations during a double-handshake data transfer in a microprocessor-based system, with the help of timing waveforms of the associated signals. Mention the device that automatically manages handshake operation. What are the two 'control words' in this device? 8

(j) (i) Explain the purpose of the following expressions in C language :

(1) (a % 5) == 0

(2) fabs (x + y)

(ii) Distinguish between a 'pointer' and an 'identifier' with example.

(iii) Write a C program to convert a temperature reading in degree Fahrenheit to degree Celsius, using the formula $C = (5/9) \times (F - 32)$. 8

Section—A

2. *(a)* Design a combinational circuit that accepts a 3-bit number as input and generates an output binary number equal to square of the input number. 10

(b) A non-inverting op-amp amplifier has got a gain of 10. The open-loop gain of the op-amp is 2×10^5. Its output resistance is 75 Ω. Calculate the output resistance of the non-inverting amplifier. 10

(c) The state transition diagram of a synchronous counter is given in Fig. 3. Design the counter circuit using *J-K* flip-flops. Use the state table for the design. 10

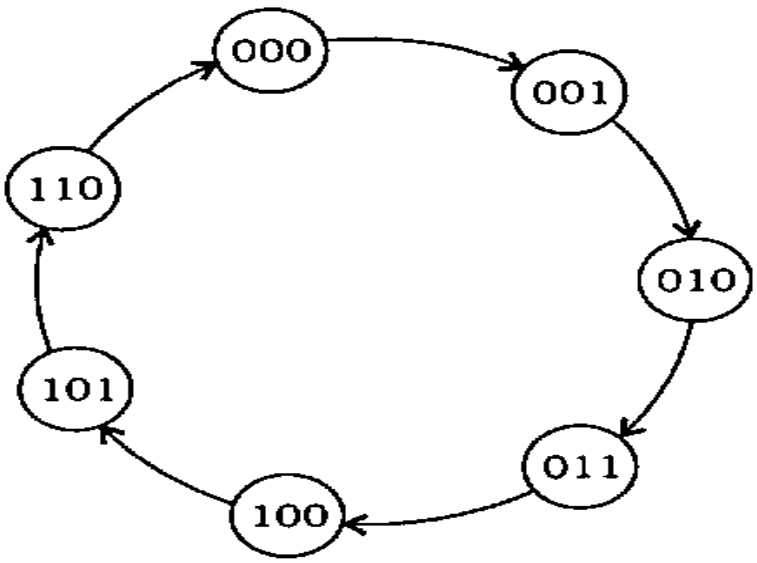

Fig. 3

3. *(a)* Define and deduce an expression for the slew rate of an op-amp. A particular op-amp has a slew rate of 0·5 V/μs. It is used as a non-inverting amplifier with a gain of 25. The voltage gain against frequency curve is flat up to 50 kHz. Calculate the maximum peak-to-peak input signal that can be applied to get the undistorted output. 10

(b) For the given circuit in Fig. 4, the decimal inputs are given from a mod 16 counter. Calculate the equivalent analog voltages when the counter outputs are 0011, 0111, 1011 and 1110. Also calculate the counter outputs when the equivalent analog voltages are 1·25 V, 2·5 V, 3·75 V and 4·06 V. Assume that binary '1' = 5 V and '0' = 0 V. 10

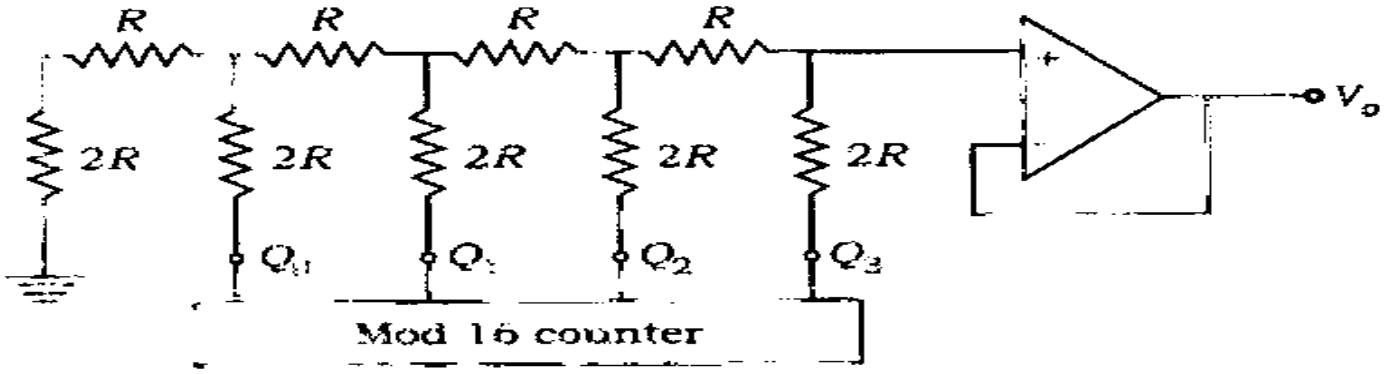

Fig. 4

(c) Implement the following functions using static CMOS circuit : 10

(i) $Y = A \cdot B$

(ii) $Y = A + B$

(iii) $Y = A \oplus B$

(iv) $Y = A \odot B$

4. (a) The response of a second-order control system has an overshoot of 30% for a step input and the overshoot takes place 0·05 second after the application of the input. Find the transfer function of the system. 10

(b) A unity feedback control system has its open-loop transfer function

$$G(s) = \frac{20(s+1)}{s^2(s+2)(s+4)}$$

Calculate its steady-state error when the applied input is

$$r(t) = 40 + 20t + 5t^2$$ 10

(c) Determine the transfer function of a compensator that will provide a phase lead of 45° and gain of 10 dB at ω = 8 rad/sec, without using graphical approach. 10

Section—B

5. *(a)* Consider a modulating signal

$$m(t) = 10 \sin (2\pi \times 10^4 t)$$

that is used to modulate a carrier frequency of 25 MHz.

(i) Find the bandwidth for 98% power transmission for phase modulation and frequency modulation using $\beta_p = 10$ and $\beta_f = 10$.

(ii) Repeat *(i)* when modulating frequency is doubled.

(iii) Repeat *(ii)* when amplitude of the modulating signal is halved. 10

(b) *(i)* The discrete sample of an analog signal is to be uniformly quantized for PCM system. If the maximum value of the analog sample is to be represented within 0·05% accuracy, find the minimum number of binary digits required.

(ii) What is companding? Why is it used? Why is it preferable to quantizing with tapered steps? 10

(c) Determine the optical power received in dBm and watt for a 20-km optical fibre link with the following parameters : 10

LED output power of 30 mW
Four 5-km sections of optical cable each with a loss of 0·5 dB/km
Three cable-to-cable connectors with a loss of 2 dB each
No cable splices
Light source-to-fibre interface loss of 1·9 dB
Fibre-to-light detector loss of 2·1 dB
No losses due to cable bends

6. (a) (i) What are the three significant differences between Microwave Transistors and Transferred Electron Devices (TED)? Sketch the two-valley model of band structure of GaAs (Gallium Arsenide).

(ii) On the basis of RWH theory, give the important criteria a semi-conductor must satisfy, in order to exhibit negative resistance. 10

(b) (i) Sketch the different Gunn domain modes exhibited by GaAs. Which mode will give a frequency much higher than the intrinsic frequency of the Gunn diode?

(ii) A negative resistance parametric amplifier has a signal frequency of 2 GHz, pump frequency of 12 GHz and output resistance of signal generator is 16 ohms. If input resistance of the signal generator is 1 kΩ, calculate the power gain in dB. What will be the power gain, if it is working as a USB converter? 10

(c) What is the magic in a 'Magic Tee'? With the help of a schematic, show how a magic tee can be used in microwave receiver for constructing a balanced mixer.

If drift length of a Read diode is 20 μm, calculate the drift time of carrier and operating frequency of the diode (carrier drift velocity = 10^5 cm/sec). 10

7. (a) (i) Perform the following operations on the given binary numbers as specified :

(1) 110·01 + 1·011

(2) Convert 11101·01 to decimal

(3) 11100·101 − 101·01 using 2's complement

(4) Convert 111000 to octal

(ii) State whether the following statement is True or False :

"All decimal fractions have exact binary equivalents." 10

(b) (i) Mention the two independent functional units in the 8086 microprocessor and explain their basic function.

(ii) Which are the registers that form part of these two units? Explain instruction pipelining. 10

(c) (i) Distinguish between Hardwired control and Microprogrammed control.

(ii) Compare and contrast RISC instruction and VLIW. 10

★ ★ ★